F-WAVE® REVIA® XTM American Blends Roofing Shingles

ABOUT THIS MANUAL

- This Installation Manual is for Steep-Slope Residential Applications of F-WAVE® REVIA® **XTM™ American Blends** Synthetic Roofing Shingles. For support with non-residential Steep-Slope installations, or for any other questions about the installation of F-WAVE® REVIA® XTM Roofing Shingles, please call F-WAVE Technical Support at 888-GO-FWAVE (888-463-9283).
- To obtain a Spanish-language version of this Installation Manual for Steep-Slope Residential Installations, please visit fwaveroofing.com or call F-WAVE Technical Support at 888-GO-FWAVE (888-463-9283).
- ***Para obtener una versión en Español de este Manual Para Instalaciones Residenciales De Pendiente Pronunciada por favor visite fwaveroofing.com o llame al soporte técnico de F-WAVE en el 888-463-928.***

PURPOSE OF INSTRUCTIONS

- These installation instructions are intended to be a general guide for experienced roofing professionals to use when installing F-WAVE® REVIA® XTM Roofing Shingles.
- Although F-WAVE® REVIA® XTM Roofing Shingles are different from traditional asphalt shingles in terms of design and materials, the installation methods are similar in many aspects.
- This manual specifically addresses the application of general roofing practices to the installation of F-WAVE® REVIA® XTM Roofing Shingles. Not every general roofing practice or detail an installer may encounter on a shingle installation is included in this manual. **Before installation, the installer must ensure adherence to all applicable state and local building codes**.

NOTE: F-WAVE shingles must be installed according to F-WAVE application instructions and requirements by a roofing professional. F-WAVE assumes no responsibility for leaks and other defects that result from failure to properly prepare the surface to which the shingles are applied, or from improper or poor application — this includes the required use of smooth, flat roof decks in good condition, the required use of a synthetic roofing underlayment, the required use of only approved sealants or adhesives, and the requirement for the installer to provide proper attic ventilation in accordance with standard minimum requirements. The installer is responsible for reviewing all applicable building codes and property standards and requirements before installation.

General Installation

Significant differences between the installation of traditional asphalt shingles and F-WAVE® REVIA® XTM Roofing Shingles are set forth in this manual. Installers should carefully read and understand each section of this manual. When installing F-WAVE® REVIA® XTM Roofing Shingles always be sure to consult your local building codes and regulations, minimum property standards, and follow all applicable requirements.

Additional information, including requirements for a FORTIFIED Home™, is available at: fwaveroofing.com/resources.

SAFETY

- FALL PROTECTION EQUIPMENT MAY BE REQUIRED AND IS ALWAYS ADVISABLE.
- ALL ROOFING AND RELATED ACTIVITIES SHOULD ALWAYS BE COMPLETED WITH SAFETY IN MIND. ALL GOOD AND PROVEN SAFETY PRACTICES SHOULD BE FOLLOWED.
- ROOFING ACTIVITY CAN BE DANGEROUS. ALL NECESSARY PRECAUTIONS AND SAFETY GUIDELINES MUST BE FOLLOWED IN ACCORDANCE WITH PROPER ROOFING TRADE PRACTICES AND REGULATIONS, OSHA REQUIREMENTS AND LOCAL BUILDING CODES.

ROOF DECK

- Select and install a roof deck adhering to local building codes, minimum property standards, and manufacturers' recommendations.
- F-WAVE requires at least ***15/32" (12mm) thick plywood*** or at least ***7/16" (11mm) thick OSB*** decking.
- ***Roof decks must be well seasoned, well supported, properly attached, and provide a SMOOTH, FLAT, nailable surface for installing shingles. Ensure roof deck and other roofing materials are dry before installing shingles.***

UNDERLAYMENT

- Select and install underlayment adhering to local building codes, manufacturers' published installation requirements, and F-WAVE's requirements.
- F-WAVE requires the use of ***synthetic underlayment*** that complies with ***ASTM D226, Type I*** or ***Type II; ASTM D4869, Type I, Type II, Type III***, or ***Type IV; ASTM D6757*** or ***ASTM D8257***.
- <u>ASTM E108 & UL790 installations:</u>
  For a ***Class A*** Roof Assembly, F-WAVE requires a ***single layer*** of ***GAF Tiger Paw*** underlayment installed according to the manufacturer's requirements.
- Always make sure the roof design and installation provides for proper ventilation to help avoid high humidity, condensation, and mold growth problems. A design professional must always address the potential for moisture entrapment, excessive moisture build-up, and condensation. Local building codes in your area should also be reviewed for ventilation requirements. See ATTIC VENTILATION section.
- Select and install waterproofing underlayment according to local building codes. Waterproofing underlayment is recommended for flashing critical areas such as valleys,

eaves, ridges, hips, pipe penetrations, dormers, slope changes, skylights, and chimneys. F-WAVE requires the use of self-adhering ***waterproofing underlayment*** compliant to ***ASTM D1970***. Asphalt based self-adhesive underlayments require a non-asphalt outer surface, or an additional synthetic underlayment between the self-adhesive underlayment and the shingle.

- Underlayment must be applied flat and unwrinkled to the roof deck. After the application of the underlayment, shingles should be installed as soon as possible.
- For guidance on the use of radiant barriers as insulation, see the Radiant Barriers & Insulations technical bulletin.

ROOF REPLACEMENT

- Check with local building codes to determine whether pre-inspections or approvals are required. Determine any specific standards that must be followed as defined by relevant building codes and minimum property standards.
- The F-WAVE WeatherForce® Advantage Standard Product Limited Warranty requires installation over a ***FLAT, SMOOTH***, clean roof deck covered with underlayment as specified in the UNDERLAYMENT section. ***Re-roofing over existing asphalt shingles or other roofing materials is NOT allowed***.
- The existing structure and deck must be suitable for providing safe working conditions and the addition of the new shingles. Check that existing ventilation is adequate and will meet the minimum standards as defined in relevant building codes and minimum property standards.

COLD CLIMATES

- In climates prone to snow and ice, ice dams often form at the eaves and any other uninsulated or unheated overhangs.
- In such locations, install waterproofing underlayment according to local building codes, and F-WAVE's requirements. F-WAVE requires the installation of waterproofing underlayment at the eaves, extending a minimum of ***24" (610mm)*** up the roof deck from the location of the ***interior face of exterior walls***. Specifications for waterproofing underlayment are detailed in the UNDERLAYMENT section.
- F-WAVE recommends installing equipment for snow retention. See the Snow Guards technical bulletin at fwaveroofing.com/resources.

DRIP EDGE

- Install non-corroding drip edge metal adhering to local building codes and minimum property standards. F-WAVE recommends metal that is at least ***0.019" (0.5mm) thick***.
- **EAVES** - Install L-Type or T-Type drip edge. Drip edge must extend a minimum of ***2" (51mm)*** back from the roof edge, bend downwards over the fascia at least ***1 1/2" (38mm)***, and kick out to direct water away from the fascia board. See **Figure 1**. F-WAVE recommends T-Type drip edge extending out from the eaves ***1/2" (13mm)***. Apply underlayment over drip edge metal at eaves.
- **RAKES** - F-WAVE requires a ***T-Type rake drip edge*** at rakes to cover the cut edge of the shingles. Apply drip edge over underlayment at rake edges. Apply a ***1/2" (13mm)*** bead of approved adhesive to drip edge. Trim shingles ***3/16" (5mm)*** from T-Type rake drip edge. See **Figure 2**.

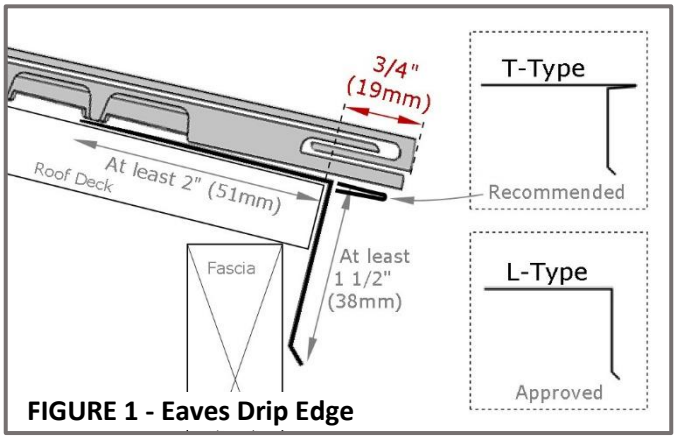

FIGURE 1 - Eaves Drip Edge

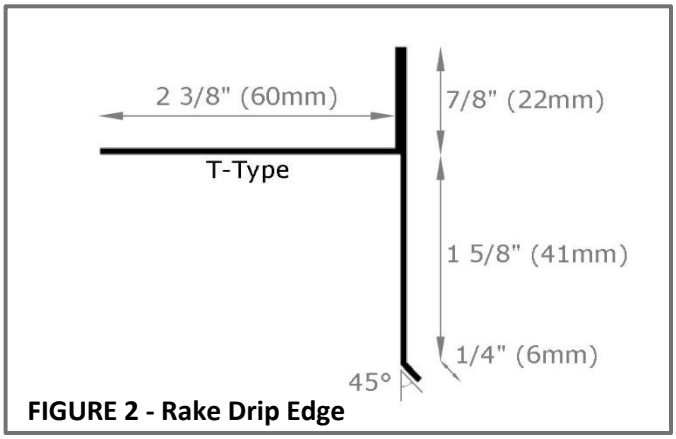

FIGURE 2 - Rake Drip Edge

LOW-SLOPES

- ***Low slopes*** are defined as slopes between 2:12 and 4:12. Roof slopes are defined by the ratio of vertical rise to horizontal run. For example, 3:12 means 3 inches (76mm) vertical rise per 12 inches (305mm) horizontal run.
- For low slope applications, F-WAVE® REVIA® XTM shingles are ornamental in regards to waterproofing. The underlayment installed becomes the primary water barrier.
- F-WAVE requires the installation of either ***one layer of self-adhering waterproofing*** underlayment, or ***two layers of synthetic underlayment*** for the entirety of low slope surfaces.
- Installations on slopes below ***3:12*** are not allowed.

FASTENING

- Select fasteners after consulting and adhering to both local building codes and F-WAVE's requirements.
- Corrosion resistant fasteners must be used which penetrate at least ***3/4" (19mm) into*** or at least ***1/16" (1.6mm) through*** the roof deck, and meet the requirements of the F-WAVE wind warranty:

Windspeed	Minimum Fastener Requirement
130mph	***1 ¼" roofing nails***, ***11*** **or** ***12-gauge***, smooth shank, ≥Ø3/8" (9.5mm) head
180mph	***1 ½" roofing nails, 11*** **or** ***12-gauge***, ring shank, ≥Ø3/8" (9.5mm) head
unlimited	***1 ½" screws***, ***minimum 8-gauge***, raised head (not countersunk)

- Fasteners must not be exposed or visible on the finished roof. Staples are not an approved fastening method.
- All fasteners must be driven straight with heads flush to the

shingle surface, and not cutting into the shingle. See **Figure 3**. Recommended air tool pressure is 100-120 PSI.

FASTENER LOCATIONS

- Use ***six fasteners per shingle*** for ***ALL*** applications, including STEEP SLOPES & HIGH WIND applications.
- To ensure shingles are installed correctly, each ***SHINGLE MUST BE IN POSITION AND ALIGNED BEFORE FASTENING. DO NOT TRY TO ADJUST THE SHINGLE POSITION ONCE THE FIRST FASTENER HAS BEEN INSTALLED AS THIS MAY CAUSE THE SHINGLE TO BOW.***
- Fasteners must be positioned within the six boxes indicated on the shingle. See **Figure 4**.
- Do ***NOT*** locate fasteners in the gutters labelled 1, 2 or 3. Fasteners must ***NOT*** be exposed once the installation is complete.

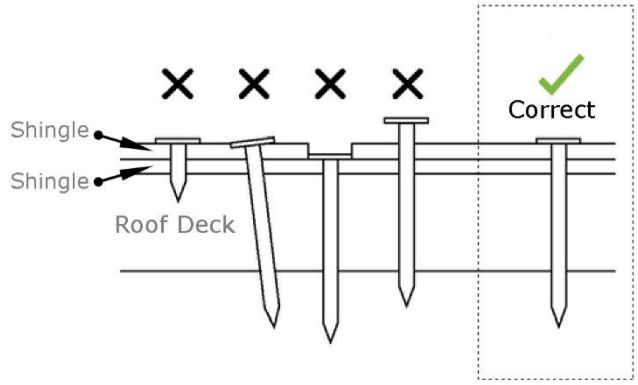

FIGURE 3 - Fastening

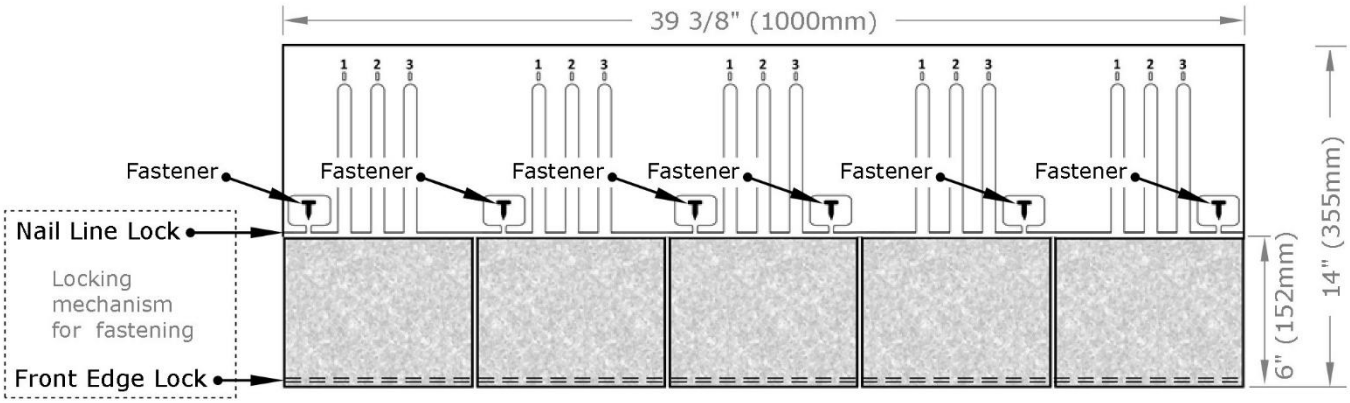

FIGURE 4 - Fastener Locations

STEEP SLOPES & HIGH WINDS

- F-WAVE defines High Winds as ***131mph (211kph)*** or higher. Refer to relevant local building codes and minimum property standards to determine whether your installation is in a High Wind Zone.
- Steep Slopes are greater than ***21:12***. Roof slopes are defined by the ratio of vertical rise to horizontal run. For example, 21:12 is 21 inches (533mm) vertical rise per 12 inches (305mm) horizontal run.
- ***For Steep Slopes and High Wind Zones F-WAVE® REVIA® XTM Shingles do NOT require hand sealing.***

ATTIC VENTILATION

- F-WAVE requires that attic ventilation meets or exceeds minimum standards as defined by the relevant building codes and minimum property standards.
- Improper attic ventilation can cause moisture buildup in the attic, heat stress on the roofing materials, and ice damming. Those situations can lead to premature failure of roofing materials including the wood decking. To ensure proper attic ventilation, air must be allowed to circulate freely from attic eaves to peaks.
- See the Radiant Barriers & Insulations technical bulletin at fwaveroofing.com/resources.

HAND SEALING

- The front edge of the F-WAVE® REVIA® XTM Roofing Shingle is held in place mechanically and does ***NOT*** require adhesive.
- In roofing situations where hand sealing is required, for example when repairing a damaged tab, use F-WAVE approved sealant and adhesive (see **Table 1**).
- Apply ***five 1" (25mm) diameter*** sized spots behind every tab, (total of 25 spots per full shingle). See **Figure 5**.
- Press the shingle down into position. F-WAVE approved sealant and adhesive should approach the edge of the shingle, but not be exposed.
- ***Seal failure due to installation temperatures being below the sealant manufacturer's minimum acceptable installation temperature is not a manufacturing defect***. F-WAVE accepts no responsibility for losses relating to sealant failure due to installation temperatures.
- For repair or replacement of a tab, hand sealing is required. Refer to the Repair or Replacement technical bulletin at fwaveroofing.com/resources.

TABLE 1 - APPROVED SEALANTS & ADHESIVES

MANUFACTURER	PRODUCT NAME
NPC Sealants	#900 Solar Seal®
R. M. Lucas Co.	#6600 Universal™ Terpolymer Sealant
OSI®	Quad® Sealant
MuleHide	SEBS1 approved, (JST1 NOT approved)

TABLE 1 - Approved Sealants & Adhesives

NOTE: ***Do not use asphalt-based adhesives or sealants.*** Asphaltic materials including underlayments are not compatible with F-WAVE® REVIA® XTM Synthetic Shingles, and contact with asphaltic materials will void the WeatherForce® Advantage Limited Product Warranty. Only use F-WAVE approved sealants and adhesives as outlined in these installation instructions and in the technical bulletins at fwaveroofing.com/resources.

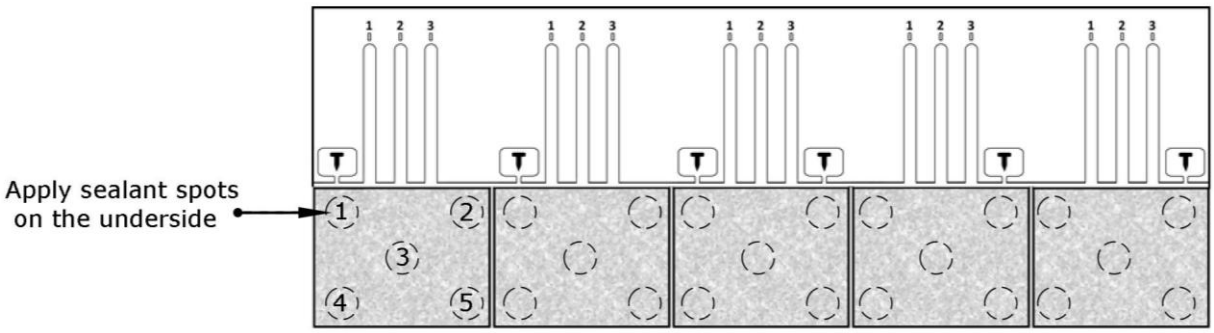

FIGURE 5 - Sealant Spots

Shingle Installation

CUTTING SHINGLES

- Score the shingle surface accurately and snap shingle along the line.

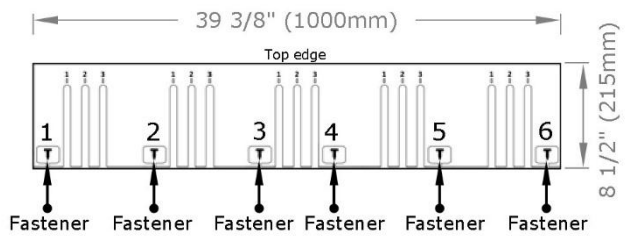

FIGURE 6 - REVIA® XTM Starter Shingle

STARTER COURSE

- F-WAVE requires the use of REVIA® XTM Starter Shingles to ensure proper waterproofing and aesthetics.
- Install either a ***T-Type*** or an ***L-Type*** drip edge at the eaves. Starter must overhang the eaves edge by ***3/4" (19mm)***. See **Figure 1**.
- Cut ***4" (100mm)*** off the length of the first full starter shingle installed on the roof, so that it is offset from the first full shingle in the first course of all eaves.
- Fasten starter shingles with ***six fasteners*** positioned within the boxes indicated on the shingle. See **Figure 6**.
- Continue along the eave with full length starter shingles before starting the first course of full shingles.
- Align shingles accurately. **Do not overlap**.
- **Do not install on any rakes or valleys**.
- Engage Course #1 Front Edge Lock into starter Nail Line Lock using the same method used for subsequent courses. Follow steps A, B and C. See **Figure 7**.

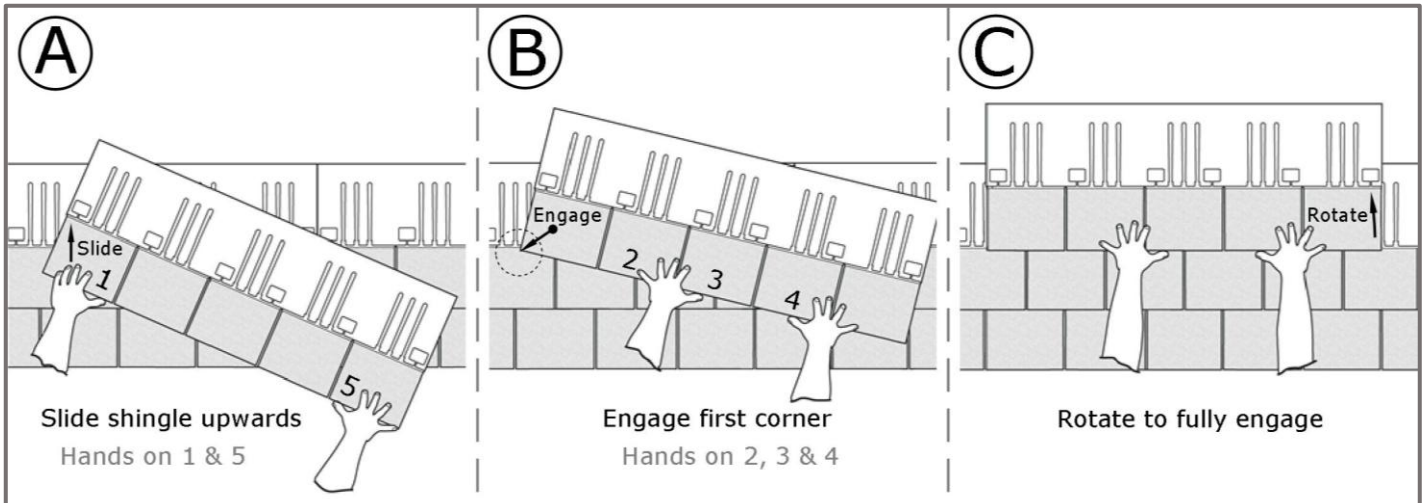

FIGURE 7 - Engagement Method REVIA® XTM Front Edge

APPLICATION PATTERN

- F-WAVE® REVIA® XTM Roofing Shingles must be installed in a ***diagonal*** application pattern. The offset between courses of **Designer Slate: American Blends** must be ***1.5 tabs***.
- Do not use other patterns such as the racking pattern. Do not use other offsets such as a 0.5-tab offset. It is important that the offset is always 1.5-tabs as other methods form a line of edges going up the roof, which may be noticeable from the ground.
- Trim shingles ***3/16″ (5mm)*** short of the rake edge.
- Use alignment marks to position shingles accurately. See SHINGLE ALIGNMENT section.

1.5-TAB OFFSET

- Establish the overall diagonal method or stair-step effect always having a 1.5-tab offset. See **Figure 8**.
- **COURSE 1** - Full shingle. APPLY FULL ROW OF SHINGLES BEFORE STARTING ON COURSE 2. THIS ENSURES STRAIGHT COURSE ALIGNMENT WHEN MOVING UP THE SLOPE.
- **COURSE 2** - Offset the second course of shingles by 1.5 tabs from the first course. Course 2 will have ***1.5 tabs*** trimmed off a full shingle. Apply full shingles for the remainder of the second course.
- **COURSE 3** - Offset the third course of shingles by 1.5 tabs from the second course. Course 3 will have ***3 tabs*** trimmed off a full shingle. Apply full shingles for the remainder of the third course.
- **COURSE 4** - Offset the fourth course of shingles by 1.5 tabs from the third course. Course 4 will have ***1.5 tabs*** trimmed off a full shingle. Apply full shingles for the remainder of the fourth course.
- **FURTHER COURSES** - Repeat pattern established for **Courses 1** to **4**, maintaining a ***1.5-tab offset***.

GENERAL ADVICE

- F-WAVE suggests that it is good practice to apply a chalk line every ***4′ to 6′ (1.2m to 1.8m)*** up the roof surface to keep the courses straight and the exposures consistent at ***6″ (152mm)***. Apply underlayment accurately to make use of any guide lines provided. **Use blue chalk only**. Red chalk can leave permanent stains on the roof. Pieces cut from shingles along the rake can be used elsewhere on the roof as required.

FRONT EDGE LOCK

- The front edge of F-WAVE® REVIA® XTM Roofing Shingles must be mechanically locked in place to provide strong wind uplift resistance. See **Figure 9**.
- Lay the shingle down flat. Ensure proper engagement by sitting the Rack Limiter down onto the roof deck.
- ***ENSURE ALL FRONT EDGE LOCKS ARE FULLY ENGAGED BEFORE FIXING SHINGLE TO DECK***.

SHINGLE RACK

- F-WAVE® REVIA® XTM Roofing Shingles have been designed to allow some rack (skew) when installed. See **Figure 10**, and **Figure 11**.
- Do not exceed maximum rack. Every F-WAVE® REVIA® XTM Roofing Shingle must lay down flat with all Rack Limiters in contact with the roof deck and all Front Edge Locks engaged.

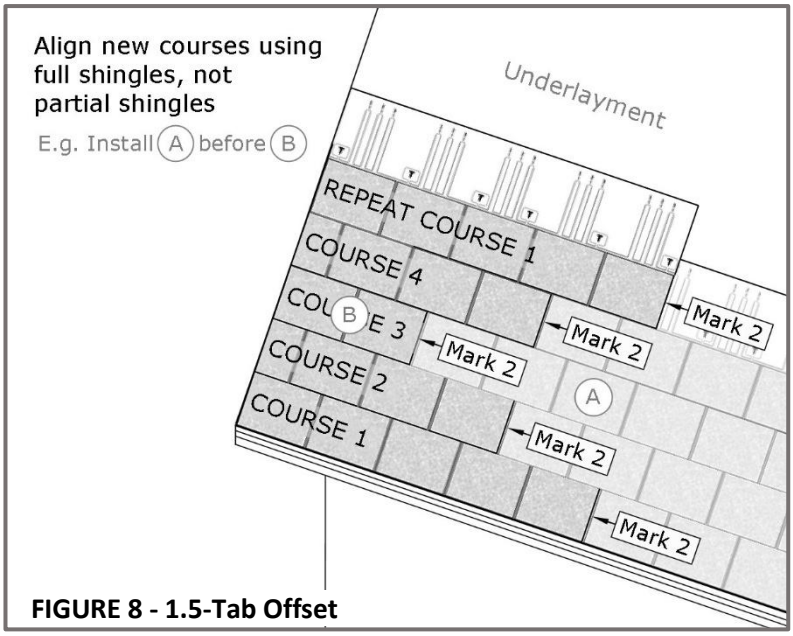

FIGURE 8 - 1.5-Tab Offset

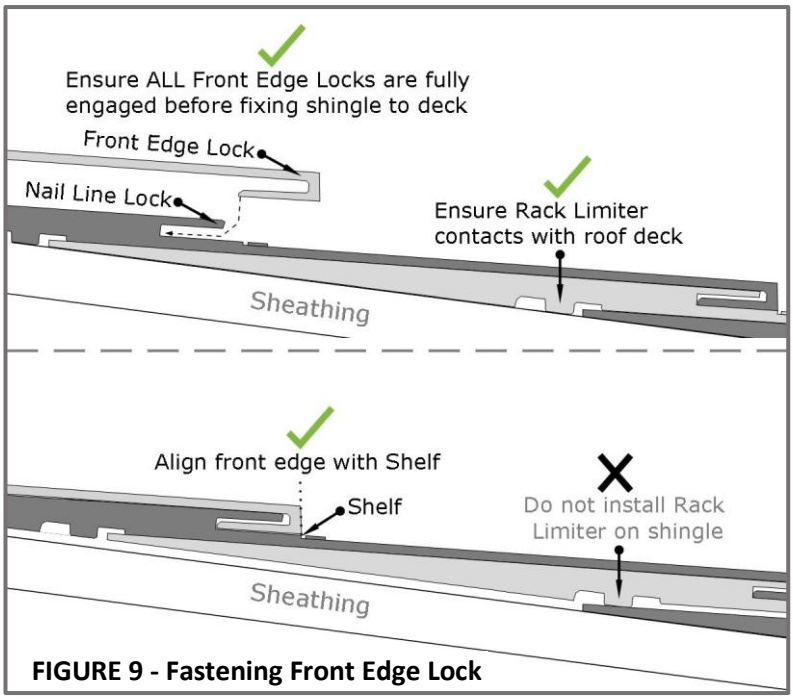

FIGURE 9 - Fastening Front Edge Lock

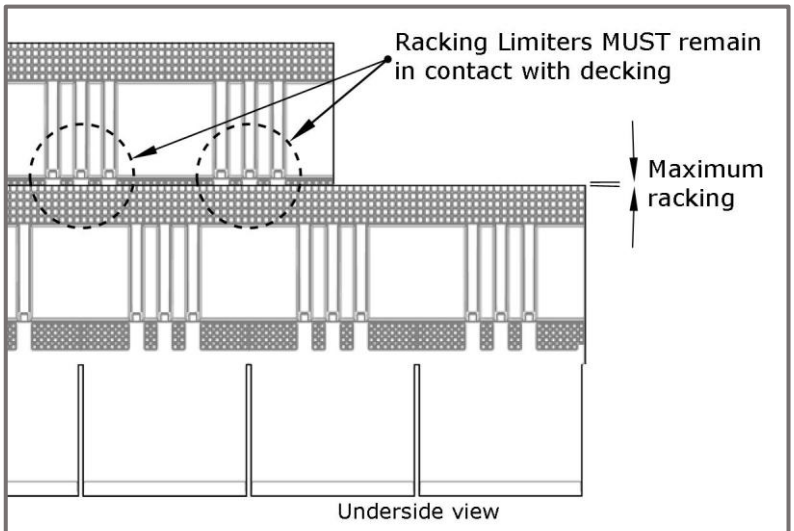

FIGURE 10 - Shingle Rack

SHINGLE ALIGNMENT

- When installing F-WAVE® REVIA® XTM Roofing Shingles it is important to place the shingles accurately.
- For Designer Slate: American Blends, always place the edge of the shingle on alignment mark **#2**. See **Figure 11**.
- When installing shingles side by side, ensure that the edges are flush with each other, so that the course is straight. It is important to make sure the nail lines are straight and match up on butted shingles. It is incorrect to misalign or overlap shingles. See **Figure 12**.

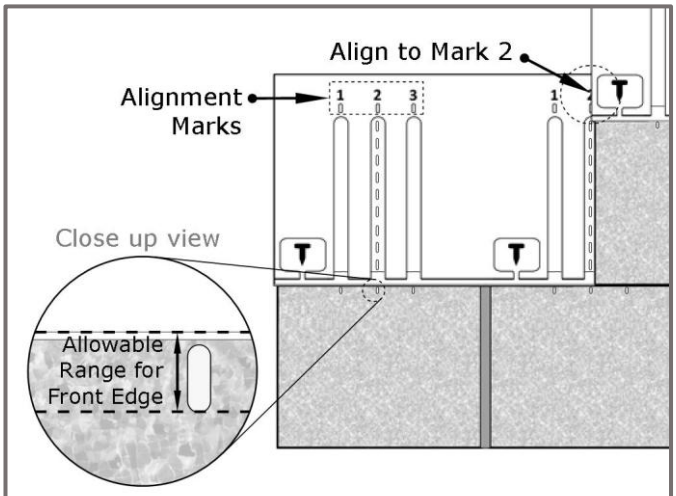

FIGURE 11 - Align to Mark 2

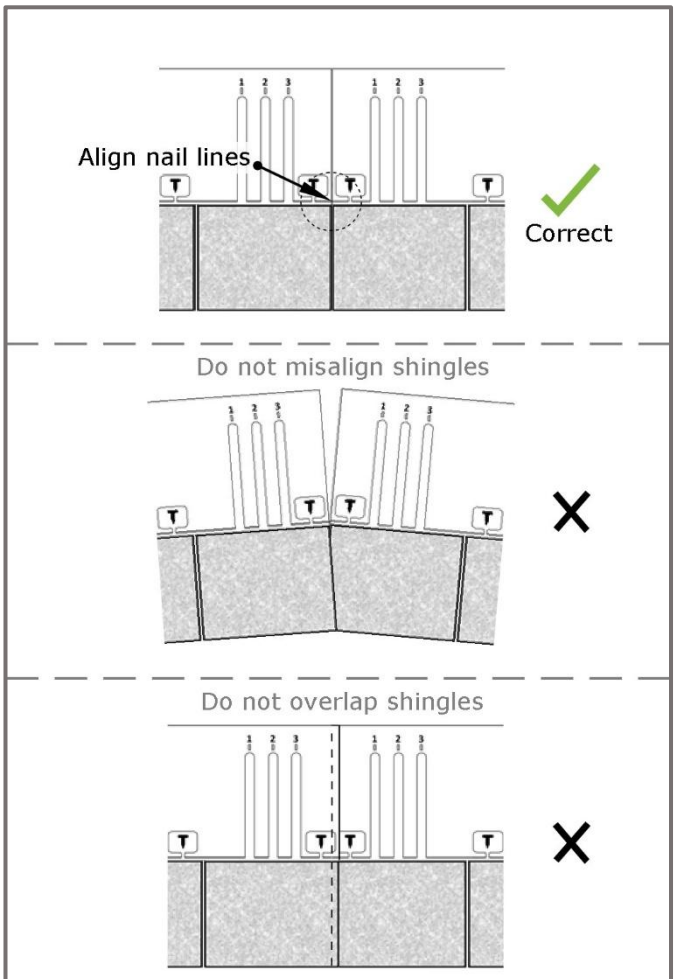

FIGURE 12 - Shingle Alignment

REDUCED EXPOSURE

- When reducing the exposure, ***ALWAYS*** lock the front edge in place by either hand sealing, or by the following method.
- **A.** Measure the Offset between shingles. Prepare a Starter Strip by trimming the nail line portion from a starter or full shingle. Starter Strip width = Offset minus 1" gap.
- **B.** Align the Starter Strip with the adjacent shingle leaving a 1" gap between the Starter Strip and Nail Line Lock on the underlapping shingle. Attach using fasteners.
- **C.** Engage the Front Edge Lock on the overlapping shingle into the Nail Line Lock on the Starter Strip. In some instances, engaging the Front Edge Lock may be difficult due to a height difference. In such cases make a cut at the front of the exposure and seal this for watertightness using F-WAVE approved sealant and adhesive.
- Continue installing shingles up the roof locking each front edge in place. See **Figure 13**.

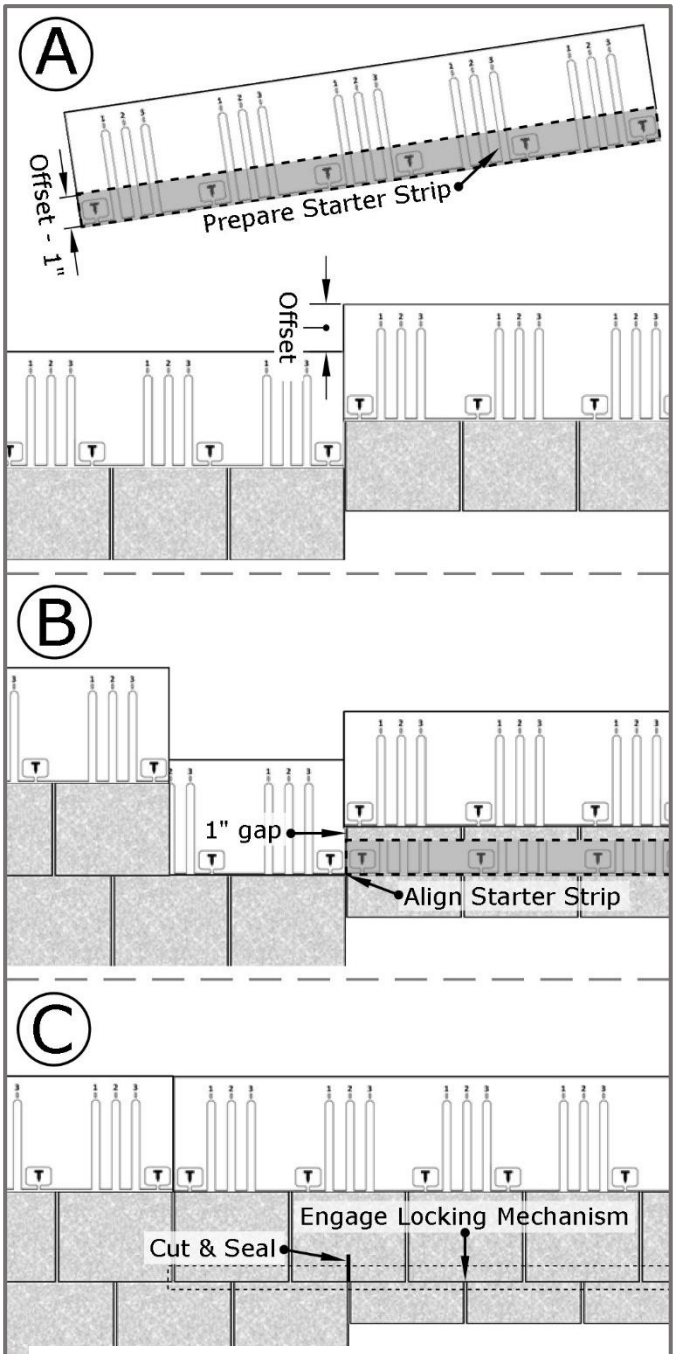

FIGURE 13 - Reducing Exposure

Flashings

VALLEYS

- F-WAVE requires either the OPEN VALLEY method or the CLOSED VALLEY ALTERNATIVE.
- **UNDERLAYMENT** - All valley flashings must be in place before shingles are installed near the valleys. Apply a minimum ***36″ (915mm)*** wide layer of waterproofing underlayment directly to the roof deck. Fasten underlayment over the waterproofing underlayment by ***6″ (152mm)***. Refer to local building codes to determine whether alternatives to waterproofing underlayment may be used.
- **VALLEY METAL** - Consult local building codes for width of metal valley and for allowed materials. The width should be a minimum of ***12″ (305mm)*** on each side. F-WAVE recommends the use of a W-style valley metal. See **Figure 14**.
- Install the metal valley on top of the underlayment and fasten ***1″ (25mm)*** from the edges of the valley. When overlapping metal valley pieces, ensure a minimum overlap of ***4″ (102mm)*** and seal together with F-WAVE approved sealant and adhesive (see **Table 1**). Do not apply fasteners at the overlaps except on the edges.
- **SHINGLES** - Trim a ***1″ (25mm) 45° angle cut*** from the top of the shingle in the valley. See **Figure 15**.
- Seal valley shingles to the metal by applying two parallel ***1/2″ (13mm) diameter beads*** of F-WAVE approved sealant and adhesive that are 1″ apart. See **Table 1**. Trim the shingles at the valley to form either an OPEN VALLEY or CLOSED VALLEY ALTERNATIVE as outlined in the following sections.

OPEN VALLEY

- F-WAVE prefers the Open Valley method using a "W" style valley metal. To install an Open Valley, first follow the instructions outlined in the VALLEYS section.
- When it comes to trimming the shingles at the valley, apply a blue colored chalk line on either side of the valley. Start at ***4″ (102mm)*** wide at the top of the valley and add ***1/8″ (3mm)*** for every ***12″ (305mm)*** of length of the valley. This will allow for increased water flow near the eaves of the roof.
- Trim shingles to the chalk line. See **Figure 16**.

CLOSED VALLEY ALTERNATIVE

- To produce a Closed Valley look, F-WAVE recommends a Closed Valley Alternative method using a "W" style valley metal. ***Closed valley methods such as the 'closed cut' and 'woven' methods are NOT allowed***.
- To install the Closed Valley Alternative, first follow the instructions outlined in the VALLEYS section.
- When trimming the shingles at the valley, leave a ***1/16″ to 1/8″ (1.6 to 3.2mm)*** gap between the cut edge and the "W" fold. See **Figure 17**.

ROOFING PENETRATIONS

- Flash all roofing penetrations using standard roofing practices. For further details go to fwaveroofing.com.

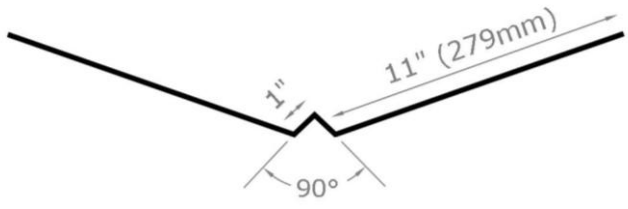

FIGURE 14 - Valley Metal Example

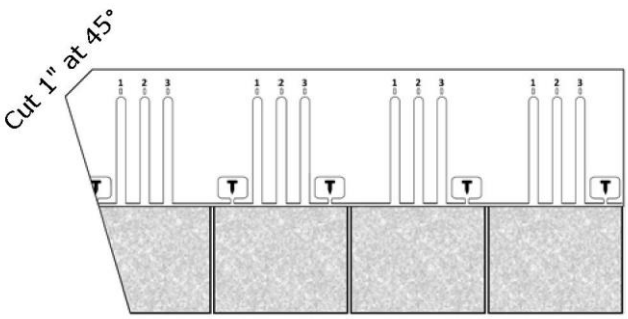

FIGURE 15 - Clip Corners

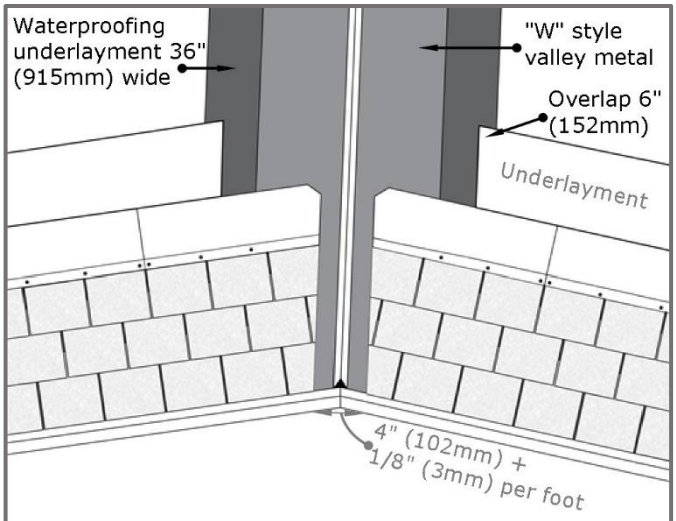

FIGURE 16 - Open Valley

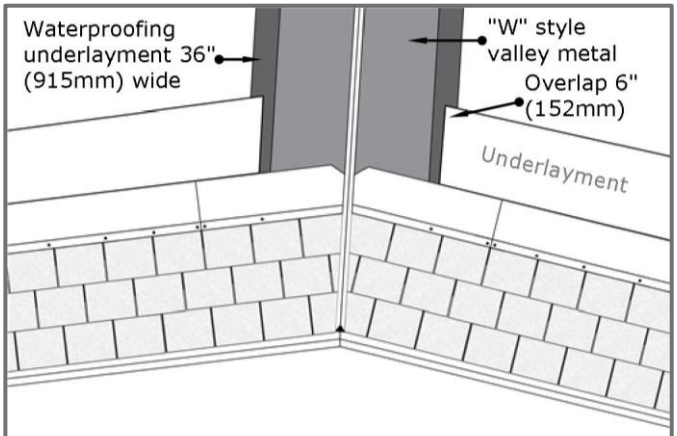

FIGURE 17 - Closed Valley Alternative

VERTICAL WALL FLASHINGS

- Adhere to local building codes and standards when installing roof to wall flashings.
- **FLASHING** - F-WAVE recommends installing metal flashings wherever the roof meets a vertical wall.
- Refer to the ROOF TO SIDEWALL and ROOF TO HEADWALL sections for details.
- **COUNTER FLASHING** - Install counter flashing over the top of the flashing as required. All siding or other counter flashing materials should terminate at least ***2" (51mm)*** above the roofing surface and overlap the metal flashing by at least ***2" (51mm)***.
- **SHINGLES** - When shingles overlap a metal flashing, do not fasten through the metal. Use F-WAVE approved sealant and adhesive, (see **Table 1**), to adhere the shingle to the metal.

ROOF TO HEADWALLS

- Apply roof shingles up to the edge of the headwall.
- Install an apron flashing at least ***5" (127mm)*** up the headwall and extending at least ***4" (102mm)*** down the roof. Nail apron flashing to the roof deck only and seal to shingles with F-WAVE approved sealant and adhesive (see **Table 1**). Do not nail the apron flashing to the wall. Instead, secure with siding material (counter flashing) over the top. Terminate counter flashing at least ***2" (51mm)*** above the roof and overlap the apron flashing by at least ***2" (51mm)***. See **Figure 18**.
- Apply second row of shingles over metal flashing on the roof surface and trim to just cover exposed metal. Use F-WAVE approved sealant and adhesive, (see **Table 1**), to adhere the cut shingle to the metal apron.
- If a cut down exposure is used as an aesthetic course, fasteners must not be exposed, and hand sealing is required.

ROOF TO SIDEWALLS

- F-WAVE recommends using ***10" x 8" (254mm x 203mm) step flashing*** metal. See **Figure 19**.
- Step flashing must extend at least ***4" (102mm)*** up the sidewall and at least ***4" (102mm)*** over underlapping shingles.
- Interlace step flashing with shingle courses as the shingles are applied. Fasten step flashing to the roof deck only, using two nails installed into the top overlapped region. Overlap pieces of step flashing by ***2" (51mm)***.
- Use F-WAVE approved sealant and adhesive (see **Table 1**) to adhere the underside of the shingle to the metal step flashing.

CHIMNEYS

- Apply underlayment up to the base of the chimney.
- Install an apron flashing on the front of the chimney. Install step flashing along the sides. For further details see the VERTICAL WALL FLASHINGS section. For recommended dimensions, see **Figure 20**.
- Install prefabricated metal cricket flashing or field fit using roofing flashings of sufficient width to cover the cricket.
- Install sheet metal cap flashing as counter flashing over flashings such as step flashing and apron flashings. See **Figure 21**.

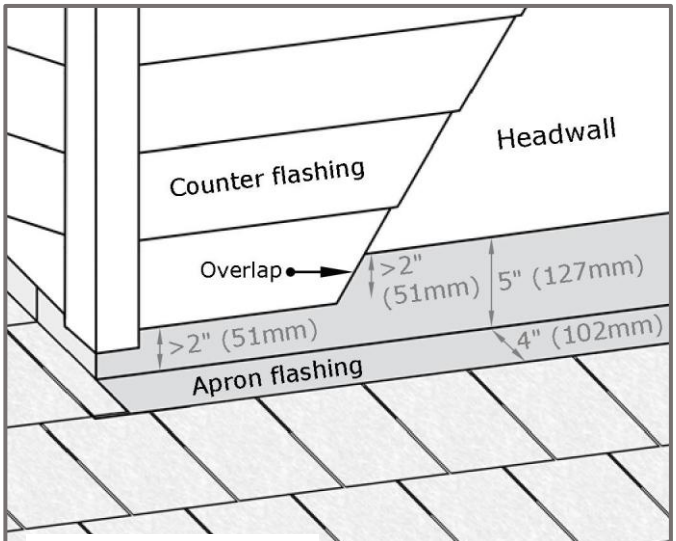

FIGURE 18 - Headwalls

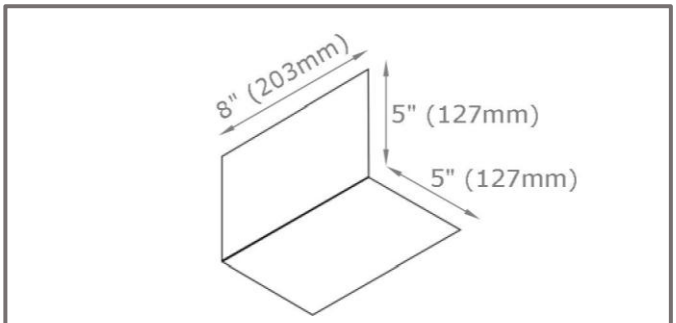

FIGURE 19 - Step Flashing

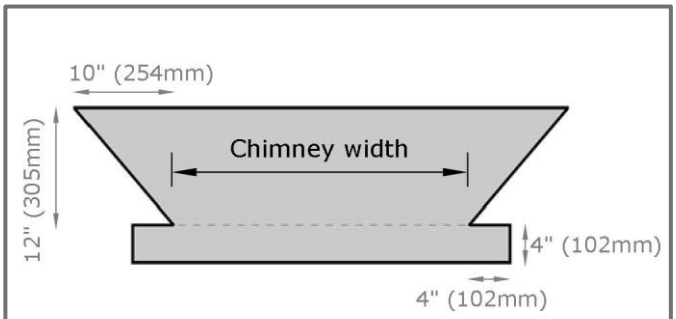

FIGURE 20 - Chimney Flashing

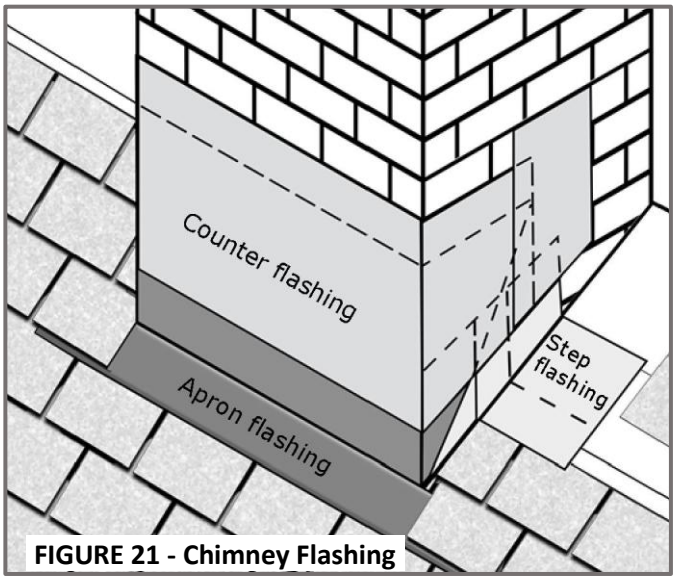

FIGURE 21 - Chimney Flashing

HIPS & RIDGES

- Install F-WAVE® REVIA® **Designer Slate** Hip & Ridge Shingles along the hips and ridges.
- Attach using two fasteners, a minimum of ***1 3/4" (44mm)*** in length. Fasteners must penetrate a minimum ***3/4" (19mm)*** into the roof deck or ***1/8" (3.2mm)*** through the roof deck. Install fasteners ***1" (25mm)*** from the edge of the Hip & Ridge Shingles, in the nailing zone indicated on each shingle. See **Figure 22**.
- Make a starter shingle by removing the exposure portion. See **Figure 23**.
- Where Hip & Ridge Shingles are installed over ridge vent, select ridge vent that is at least ***11" (279mm)*** wide. Install ridge vent according to manufacturer's instructions.
- Install Hip & Ridge with a ***7 3/4" (197mm) exposure***. At the ridge, start the Hip & Ridge shingles from the opposite direction of the prevailing winds. See **Figure 24**. Begin hips at the bottom of the hip. For further installation details about F-WAVE Hip & Ridge Shingles, visit fwaveroofing.com/resources.

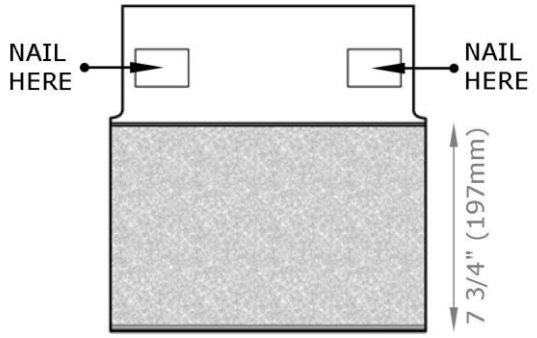

FIGURE 22 - Designer Slate Hip & Ridge Shingle

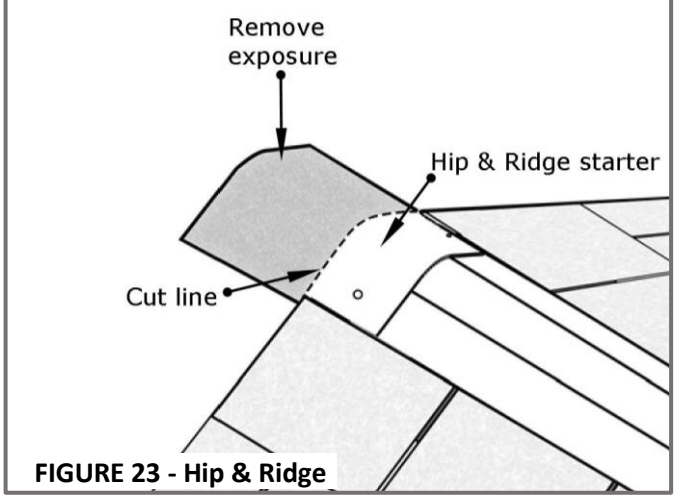

FIGURE 23 - Hip & Ridge

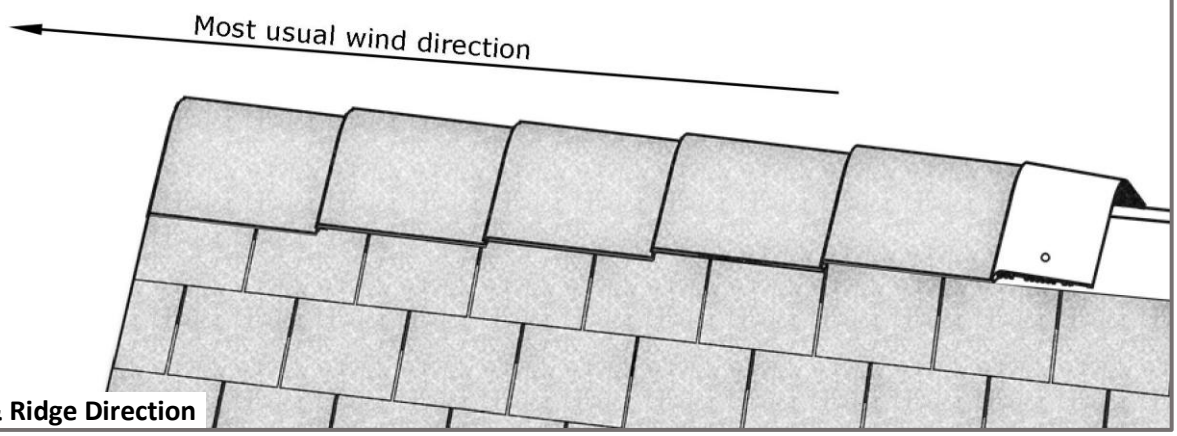

FIGURE 24 - Hip & Ridge Direction